Certificate of Analysis

www.apexbt.com

Product Name: **MAP kinase fragment [Multiple species]**

Catalog No.: A1079

Batch No.: 1

1. PHYSICAL AND CHEMICAL PROPERTIES

Batch Molecular Formula:	$C_{48}H_{77}N_{13}O_{13}$
Batch Molecular Weight:	1044.2
Purity:	>97%
Cas No.:	N/A

2. ANALYTICAL DATA

HPLC:	Shows Min 97% purity
Mass Spectrum:	Consistent with structure

3. Structure

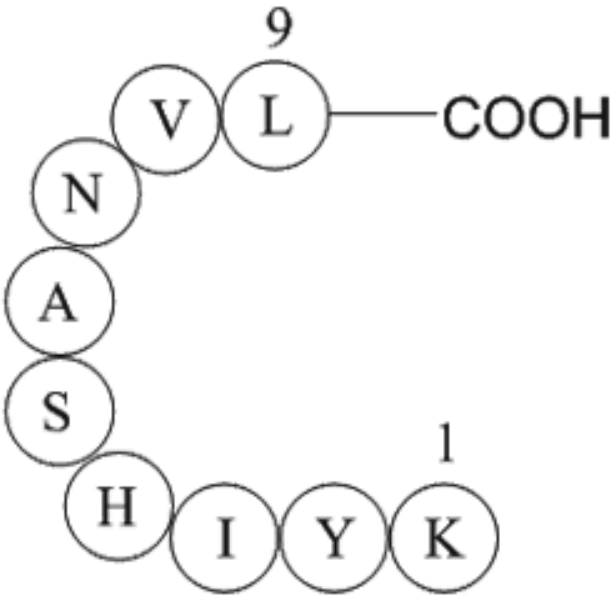

Caution - Not Fully Tested • Research Use Only • Not For Human or Veterinary Use

ApexBio Technology LLC

Tel: +1-(832)696-8203 Fax: +1-832-641-3177 Email: sales@apexbt.com

www.apexbt.com